1.0 OBJECTIVE

To provide information on available product features and customer application considerations for the PwrBlade™ Connector System.

2.0 SCOPE

This application specification provides information regarding product features, customer uses, and product possibilities for configurations including:

- Vertical press fit and solder tail headers
- Right angle solder tail headers
- Vertical press fit and solder tail receptacles
- Right angle press fit and solder tail receptacles

3.0 GENERAL

3.1 This document is meant to be an application guide. If information varies from that in the product drawings and specifications, the drawings and specifications take precedence.

3.2 This document covers the following sections:

4.0 Procedure

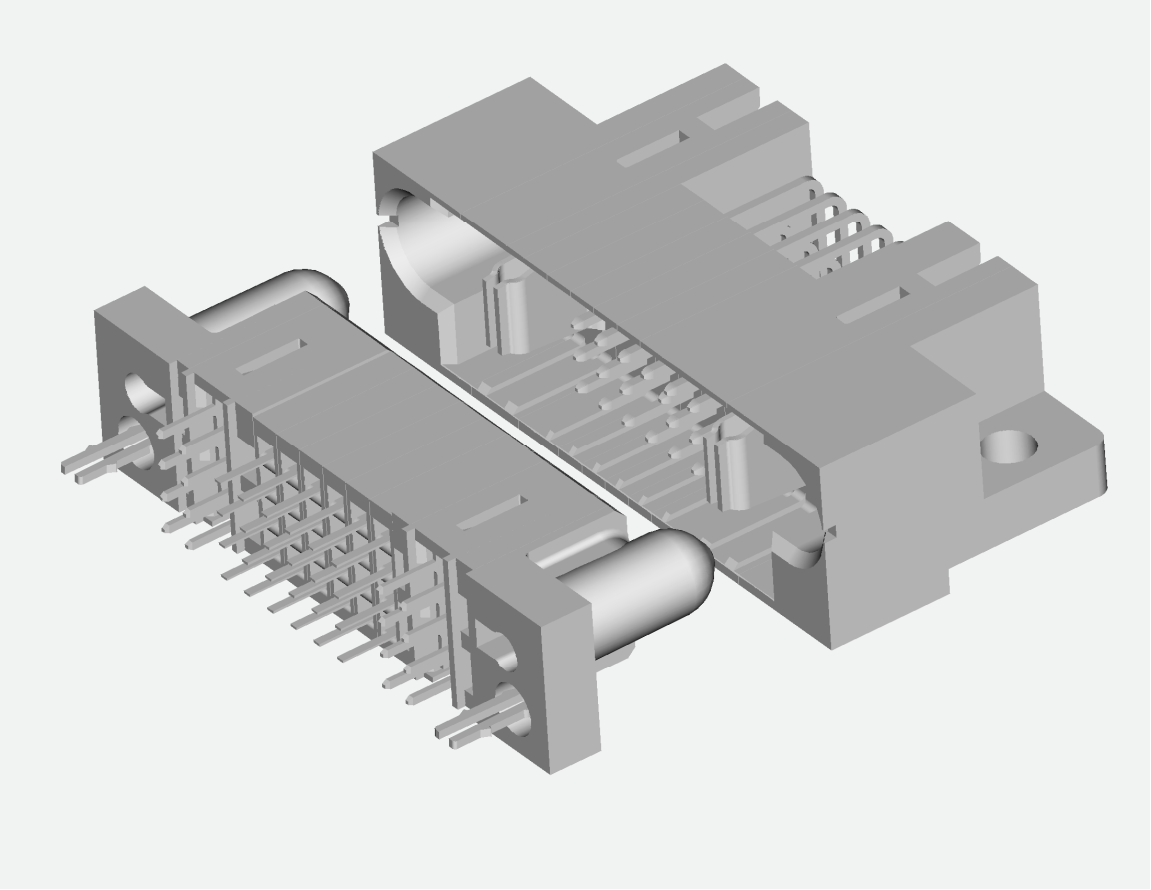

Figure 1 – Exploded view of a Right Angle Header mating With a Vertical Receptacle.

PwrBlade™ has two options for connection to Printed Circuit Boards; Press Fit and Solder to Board. The press fit configuration is available with the vertical headers and vertical and right angle receptacles. The solder tail option is available with all headers and receptacles. The PwrBlade™ Solder to Board Power and Signal Contacts are compatible with several soldering processes, including wave soldering. They are versatile with many configurations to fit the individual needs of the client and are less expensive than press fit. The Press Fit connection eliminates the need for soldering, achieving a connection to the board through the normal forces between the press fit tail and the plated through hole. The number of signal and power contacts is customer dependent with three choices of pitches between power contacts. PwrBlade™ has high current carrying capabilities ideal for data communications and data processing and is well suited for a wide variety of applications, such as SSI server power supplies, Fault-tolerant computers, Modular and hot-swap redundant N+1 power distribution systems and uninterruptible power systems (UPS).

4.1 Mechanical Properties

4.1.1 Insertion/Retention force per individual pin for power/signal contact

- The force required to insert an individual compliant pin into a plated through hole in a PCB shall not exceed 25 lbs. per tail for power contact, 6 lbs. per signal receptacle contact and 21 lbs. per signal header pin. The retaining force shall not be less than 5 lbs. per tail for power contact, 1.5 lbs. per signal receptacle contact and 3 lbs. per signal header pin.

- PWRBlade™ is designed to be repairable and as such the PCB will withstand the following criteria upon completion of 3 cycles:

  - The average hole deformation after three insertion cycles shall not be greater than a 0.0015" increase in radius with a maximum increase less than 0.002" as per MIL-STD-2166.

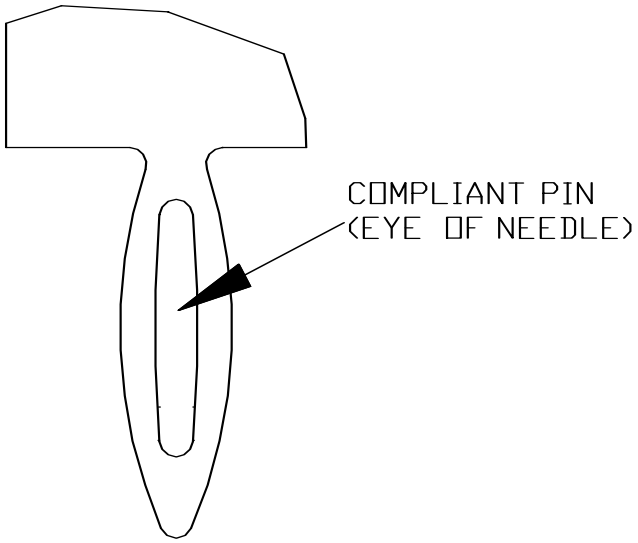

Figure 2- Power contact with the Eye of the Needle configuration as used on the vertical press fit receptacle.

4.1.2 Insertion/Retention forces per hold down clip

- The insertion forces per hold down clip shall be less than 6 lbs.
- The retention forces per hold down clip shall be greater than 3 lbs.

4.1.3 Mating/Unmating forces per power/signal contact

Table 1

	Mating		Unmating	
	Max Allow	Typical	Min Allow	Typical
Contact	(oz)	(oz)	(oz)	(oz)
Power	25	23	8	19
Signal	3.5	1.6	.64	1.5

- A typical value for mating force for a PwrBlade ™ with a configuration of 23 signal contacts and 12 power contacts is 17.25 lbs for the power contacts and 2.3 lbs for the signal contacts.
- A typical value for unmating force for a PwrBlade™ with a configuration of 23 signal contacts and 12 power contacts is 14.25 lbs. for the power contacts and 2.16 lbs. for the signal contacts.

4.2 Electrical Properties

- Current Rating
  48 A max for one powered contact
  30 A max for all contacts powered
- Insulation Resistance of 20,000 MΩ after environmental testing.
- Dielectric Withstanding Voltage 1000 V per signal contact and 2500 V per power contact.
- Maximum Contact Resistance of a mated pair is 2.0 mΩ.

4.3 Materials

Mass of Materials

- The mass of a fully loaded PWRBlade R/A Header with a .250" pitch can be found using the following formula:
  - The number of Power Positions x 2.766g (.098 oz) +
    The number of Signal Positions x 3.243g (.11 oz) +
    4.320g (.15 oz.) if blind mate ends or 1.152g (.041 oz) if guideless ends
- The mass of a fully loaded PWRBlade R/A Receptacle with a .250" pitch can be found using the following formula:
  - The number of Power Positions x 2.383g (.084 oz.) +
    The number of Signal Positions x .621 (.022 oz) +
    3.194g (.113 oz.) if blind mate ends or .572g (.02 oz) if guideless ends
- The mass of a fully loaded PWRBlade Vertical Receptacle with a .250" pitch can be found using the following formula:
  - The number of Power Positions x 1.606g (.057 oz.) +
    The number of Signal Positions x .463 (.016 oz) +
    2.376g (.042 oz.) if blind mate ends or .200g (.0035 oz) if guideless ends

Mass of Housing grams (oz.)			
Module	R/A Header	R/A Receptacle	Vertical Receptacle
Power	.7648 (.0270)	.9344 (.0330)	.6486 (.0229)
Signal	.3130 (.0110)	.5534 (.0195)	.4037 (.0142)
Spacer (.025")	.2222 (.0078)	.1048 (.0037)	.0544 (.0019)
Center	1.756 (.0619)	1.216 (.0429)	.8890 (.0314)
Guideless Ends	.5761 (.0203)	.2858 (.0101)	.1002 (.0035)
Blind Mate Ends	2.159 (.0762)	1.597 (.0563)	1.188 (.0419)

- Header signal pins are a Phosphor Bronze alloy.
- Power contacts are a Copper base alloy.
- Receptacle signal contacts are a Beryllium Copper alloy.
- PCB solder tails have a minimum of 100 µin of tin/lead or tin.
- Contacts have a minimum of 50 µin nickel underplating with 30 µin of gold overplate on the mating interface.
- Housings are 45% glass filled HTN (High Temperature Nylon) UL 94V-O flame class with an oxygen index of 49%.

4.4 PCB Requirements

A press fit connection secures a connector to a printed circuit board without the use of a soldering process. The features of the PCB that are important are:

- Drilled hole diameter
- Plated hole diameter
- Plating applied to the through hole
- Printed circuit board thickness
- Land/pad size

These features ensure the reliability of the connection with the PCB as well as the force required to insert and withdraw the connector. The features for PwrBlade™ are as listed in Table 2.

Table 2

	mm	in
Drilled hole diameter	1.151 +/- 0.025	0.0453 +/- 0.001
Plated hole diameter	1.016+/- 0.08	0.040+/- 0.003
Copper plating	0.051 +/- 0.025	0.002 +/- 0.001
Tin/Lead plating	0.007	0.0003
Land/Pad size	1.727 +/- 0.064	0.068 +/- 0.0025

- For press fit termination the PCB must be at least 0.062” thick.
- For solder tail termination the values for the PCB are as follows:

Table 3

Tail Lengths(in)	Maximum PCB Thickness(in)
0.090 +.005/-.010	0.062 +/-0.010
0.135 +/- 0.020	0.095 +/- 0.010
0.165 +/- 0.020	0.125 +/- 0.010

- The layout for the PCB is shown in Figure 3.

Fig. 3

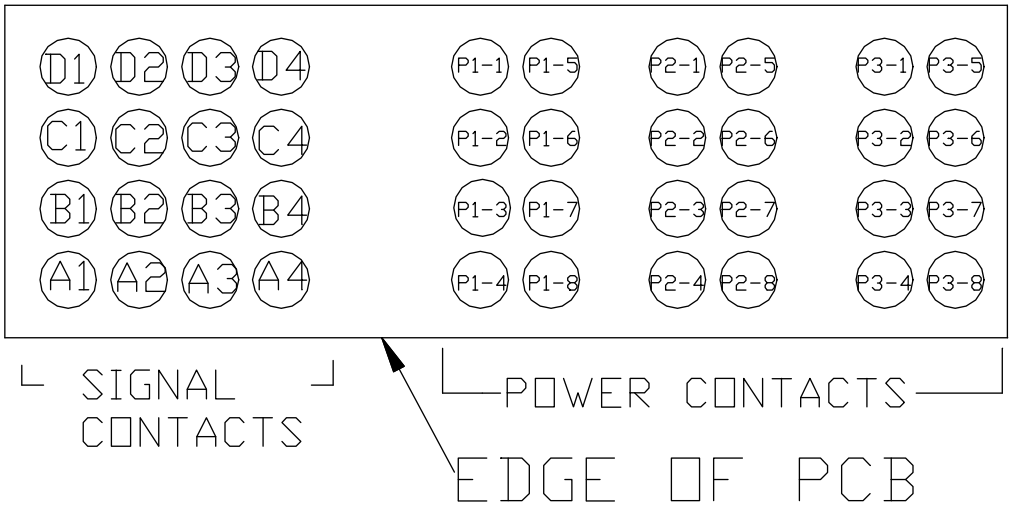

4.5 Customer Design Considerations

4.5.1 Wipe Length

Table 4

		Mating Length (in)	Min Wipe Length (in)
Power	Pre	0.042	0.227
	Standard	0.092	0.177
Signal	Standard	0.270	0.152
	Post	0.220	0.102

See figure 4 and 5 for layouts of these values.

Fig. 4

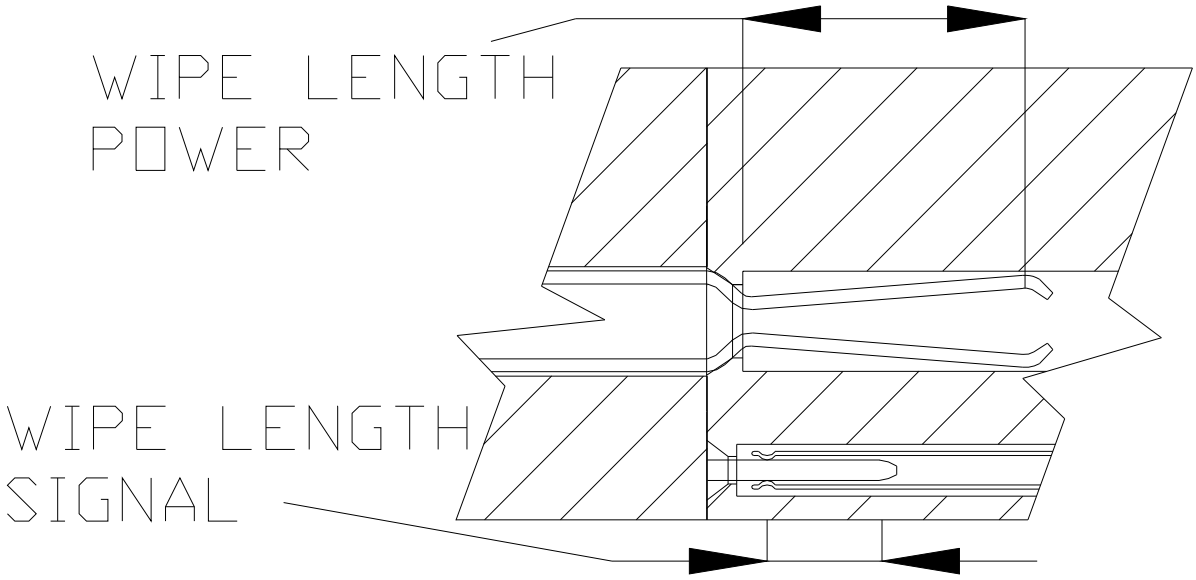

Fig. 5

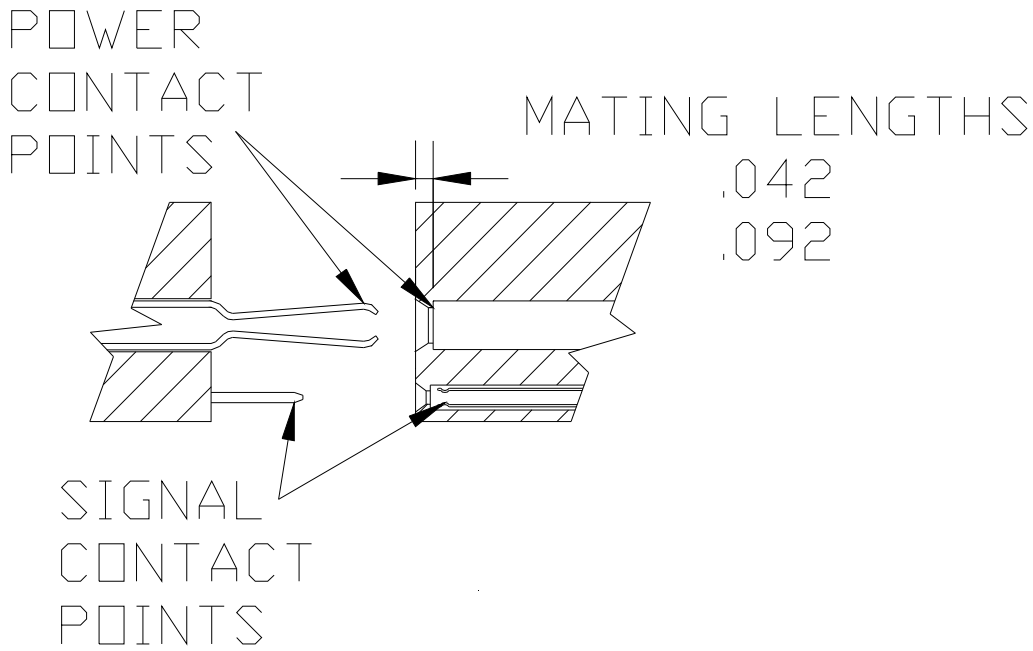

4.5.2 Sequencing

- PWRBlade has 3 levels of sequential mating to support hot plugging. They are:
    - Level 1 Pre Mate Power
    - Level 2 Standard Mate Power and Signal
    - Level 3 Post Mate Signal

- Changing the mating distance of the receptacle power contact and header signal pin as illustrated in figure 6, 7, 8 and 9 creates two levels of power sequencing and two levels of signal sequencing.

Fig. 6
Level 1 Premate Power

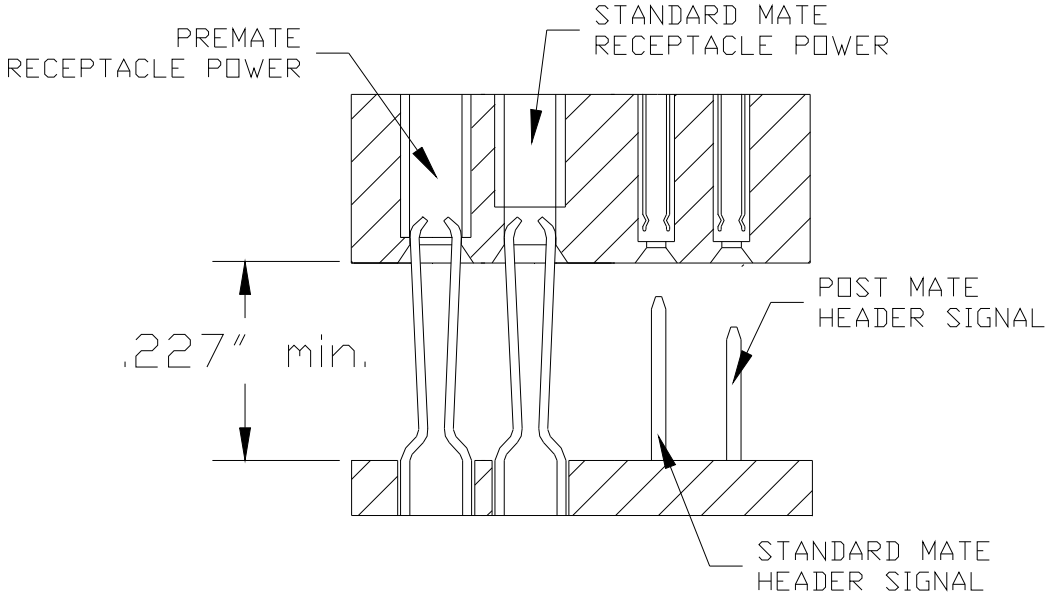

Fig. 7
Level 2 Standard Mate Power*

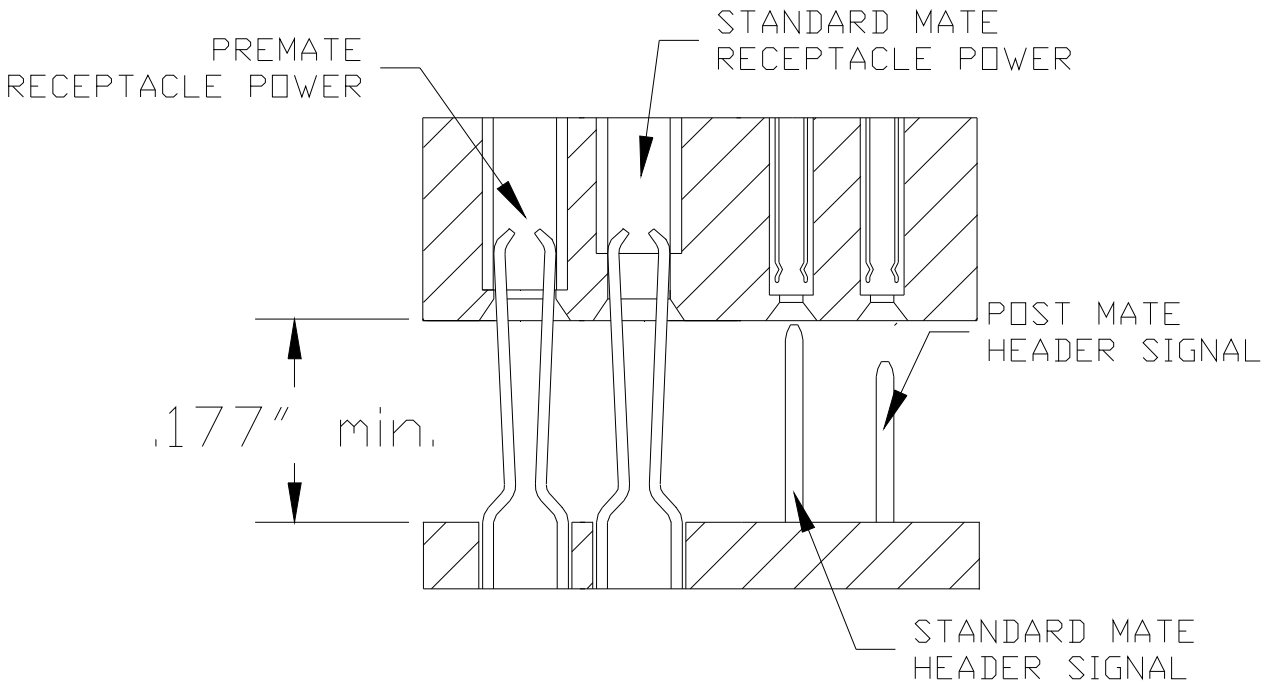

Fig. 8
Level 2 Standard Mate Signal*

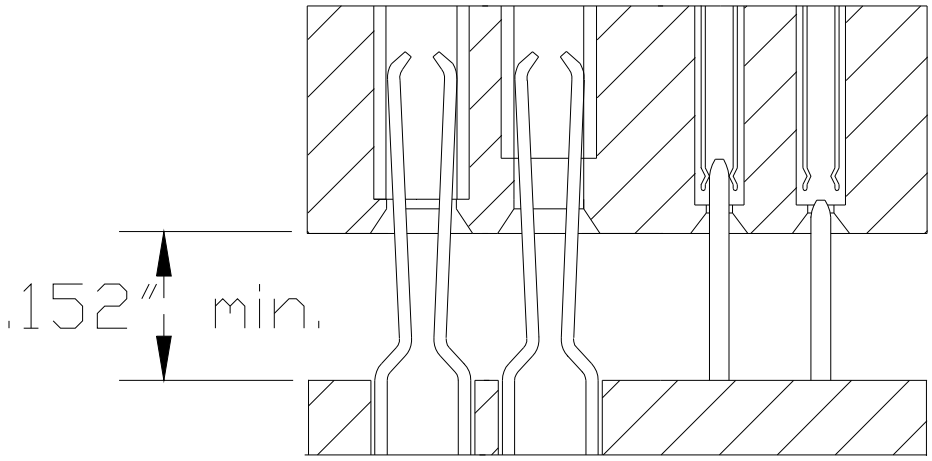

*Note: Figure 7 and 8 show the separation between post mate power and standard mate signal is not great enough to be considered two separate levels of sequencing.

Fig. 9
Level 3 Post Mate Signal

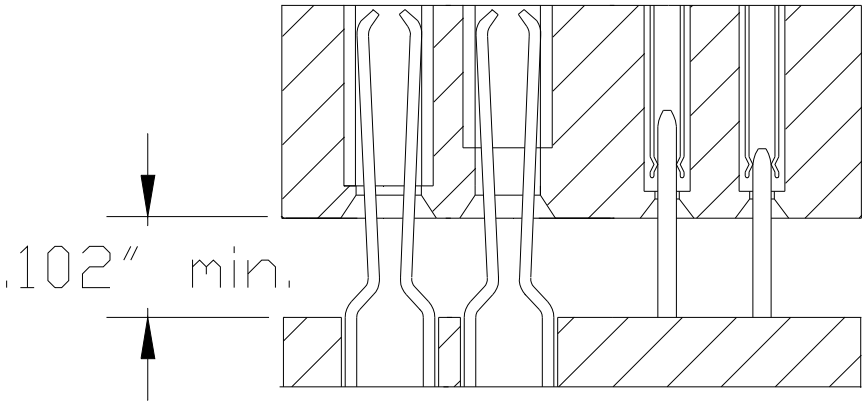

4.5.3 Mating Misalignment

Blind Mate Guide Ends

- The connectors can be radially misaligned by a nominal value of 0.075”

Fig. 12

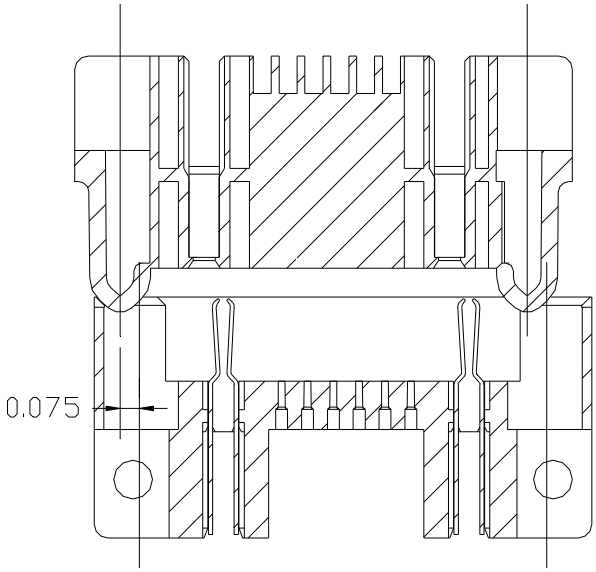

Fig. 13

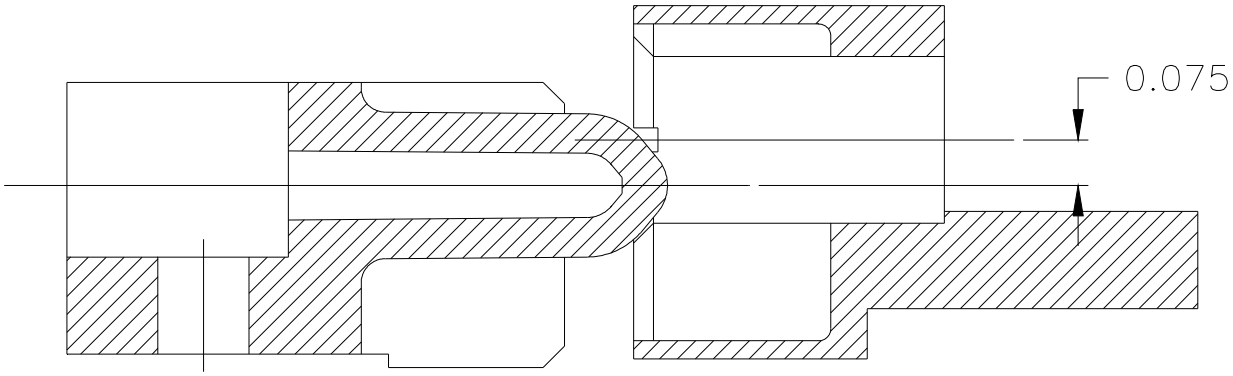

Guideless Ends

- The connectors can be misaligned nominally by +/-0.010” in the x direction.
- The connector can be misaligned nominally by +/-0.022” in the y direction.

Fig 14

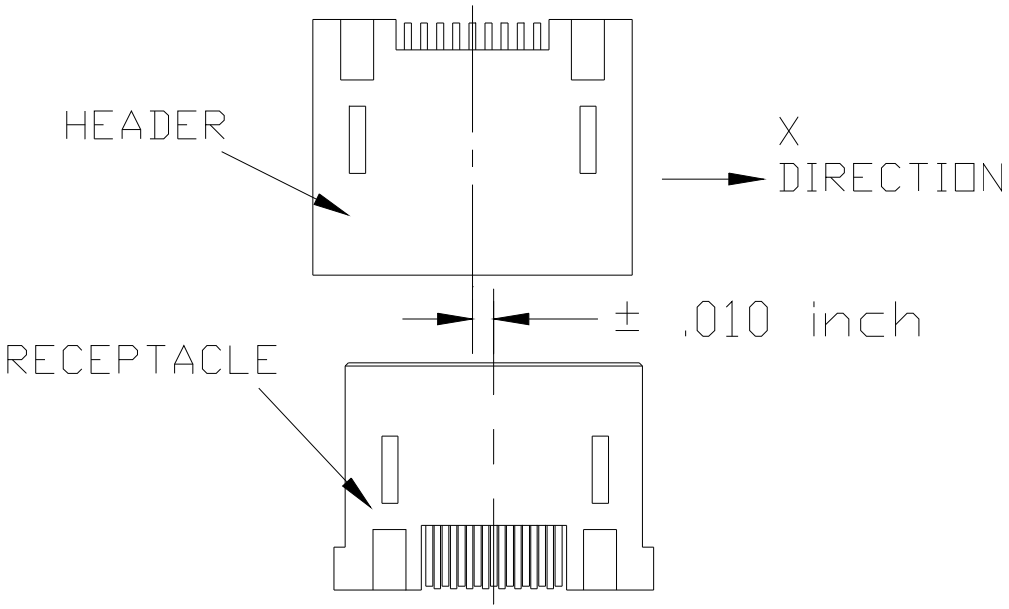

Fig. 15

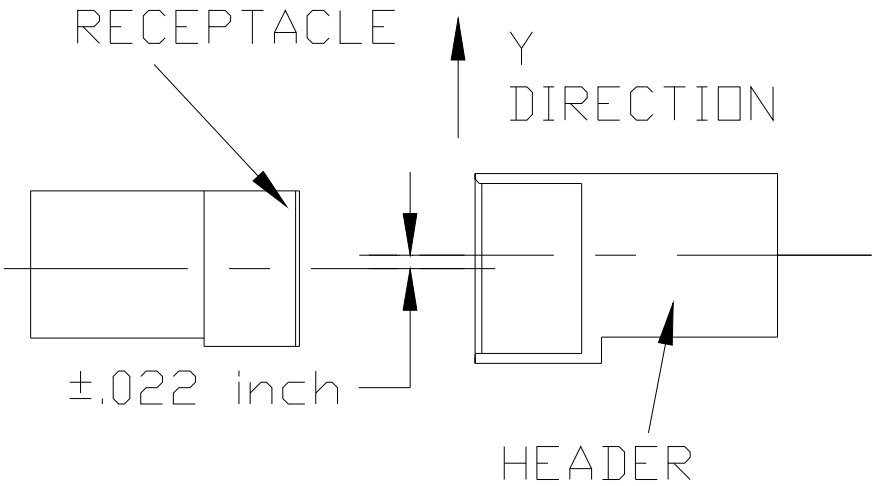

4.5.3.1 Ganged connectors should not be mated to connectors ganged on a mating board.

4.5.4 UL Finger Probe Protection

- PwrBlade™ connectors are protected against the UL Finger Probe as specified in UL 1950 rev. 1995 figure 16, in the following areas:
  - Vertical Receptacles Convection window. See figure 17.
  - Right Angle Headers and Receptacles and Vertical Receptacles cored latch. See figure 18.
  - Right Angle and Vertical Receptacles power and signal contacts window. See figure 19.

Fig. 16

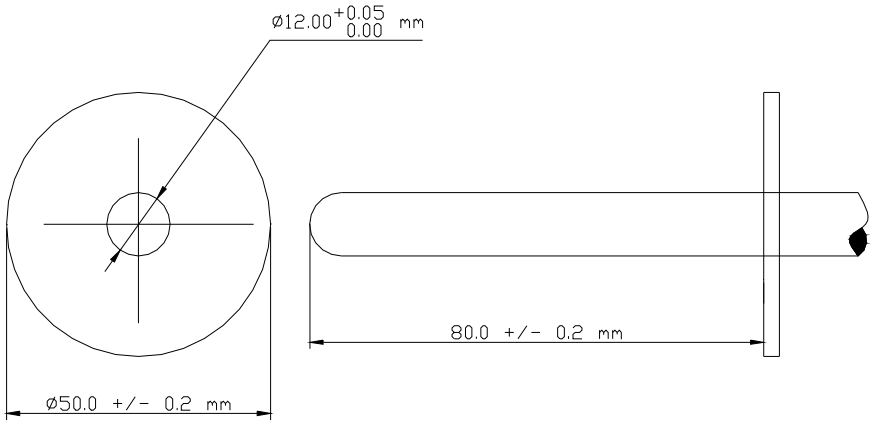

Dimensions of UL Probe

Fig. 17

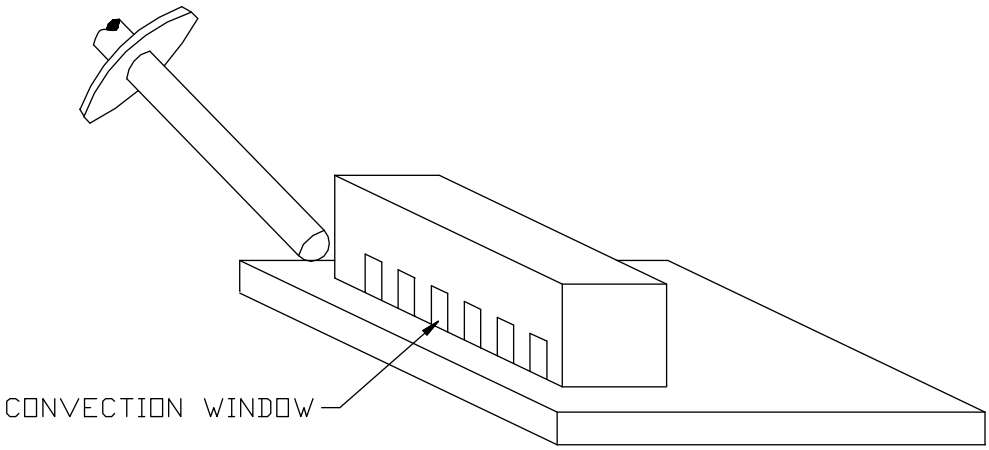

Fig. 18

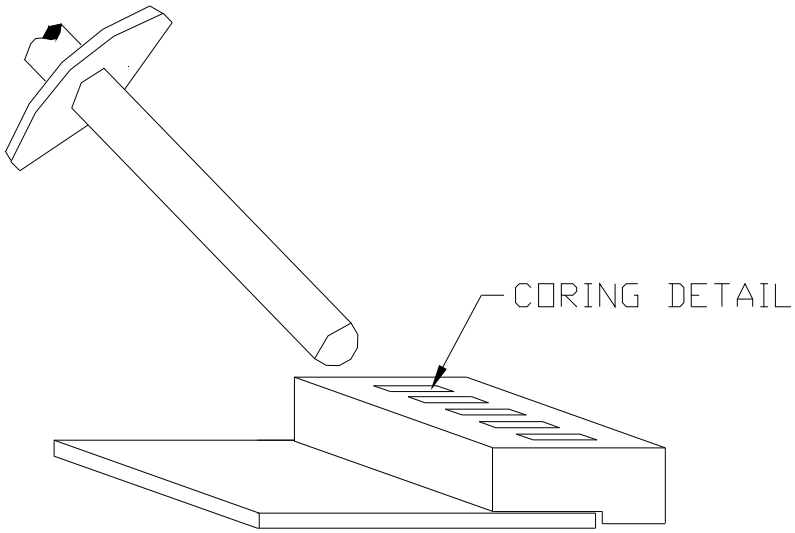

Fig. 19

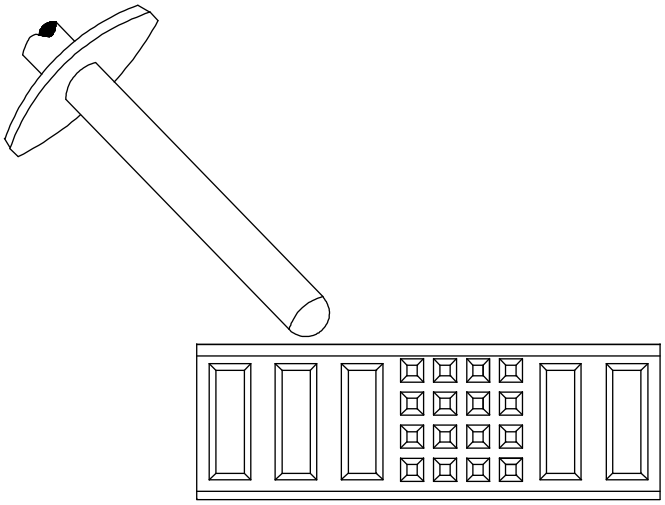

Fig. 20

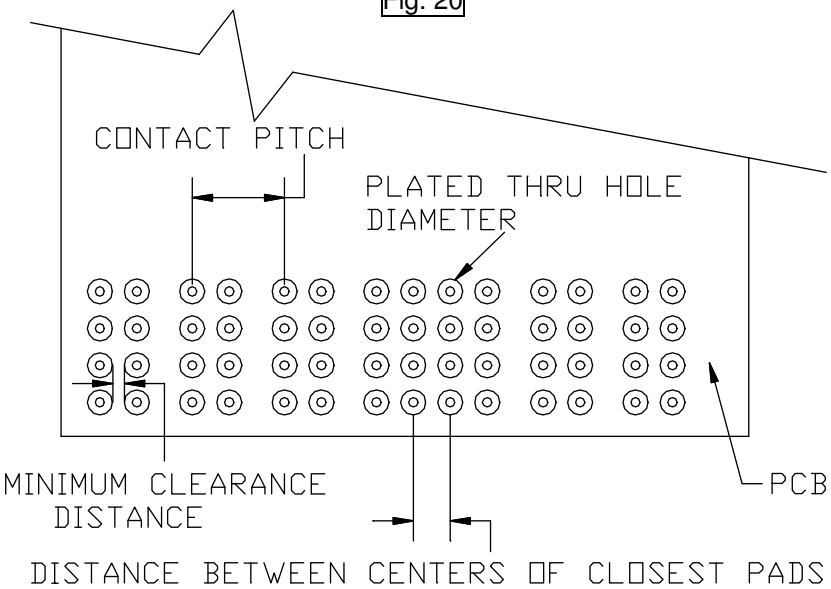

Fig. 21

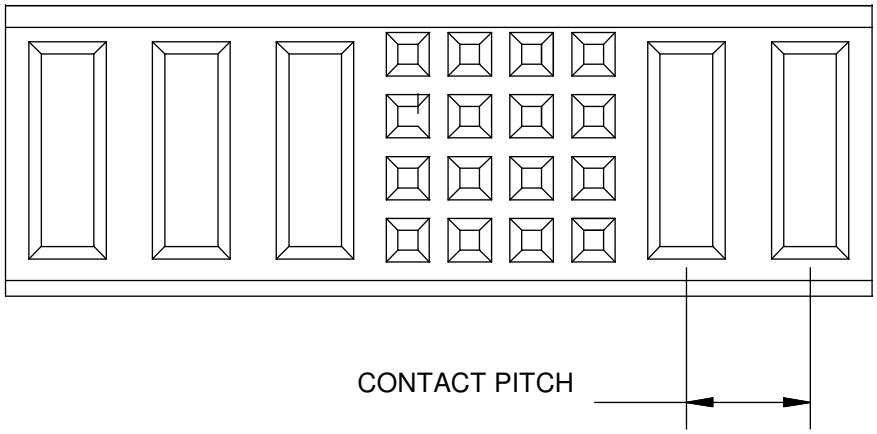

4.5.5 Maximum Operating Voltages

- The maximum operating voltages are dependent on the minimum clearance distances and the function of the circuit. The spacing is referred to as the "Contact Pitch". PwrBlade™ has a standard contact pitch of .250" with .200" and .300" as options. Table five describes the maximum voltages for the three contact spacings for the following four conditions; within primary circuits, primary to secondary circuits, primary to ground and within secondary circuits. Figures twenty-one and twenty-two are provided as a reference and is not meant to replace the requirements as stipulated in UL 1950. These conclusions were made by making the following assumptions:

  - Pad size of .068' in diameter or smaller is used on the Printed Circuit Board.
  - The operating environment is of category two as described in UL 1950, section 2.9.
  - The insulation working voltage in the primary circuits is less than 300 volts r.m.s.
  - The nominal mains supply voltage is greater than 150 volts and less than 300 volts.
  - The insulation working voltage in secondary circuits is less than 50 volts r.m.s.
  - PwrBlade™ is covered by the specifications of material group 2 in accordance with UL 746 A which includes a CTI less than 600 volts and greater than or equal to 400 volts.
  - The PCB's on which PwrBlade™ will be installed have a CTI greater than 100 and less than 175 effecting creepage distances and placing it in material Group iiib as specified in UL 1950, section 2.9.3.

Minimum clearance distance is found by:

Minimum Clearance Distance = Contact Pitch - .100" – Recommended Pad Size (see figures 20 and 21)

If Contact Pitch =.200"	Distance Between Power Tails=.100"	and	MCD=.032" (0.813 mm)
If Contact Pitch =.250"	Distance Between Power Tails=.150"	and	MCD=.082" (2.083mm)
If Contact Pitch =.300"	Distance Between Power Tails=.200"	and	MCD=.132" (3.353 mm)

Assuming creepage distances no greater than the minimum clearance distance the following voltages are recommended:

Table 5

Volts RMS (*SELV Circuits)				
Contact Pitch	Within Primary Circuits	Primary to Secondary Circuits	Primary to Ground Circuits	Within Secondary Circuits
.200" (5.08 mm)	60*	60*	60*	60*
.250" (6.35 mm)	200	NR	200	200
.300" (7.62 mm)	300	150	300	300

4.5.6 PCB Alignment

4.5.6.1 Right Angle Receptacle to Right Angle Header

Fig. 22

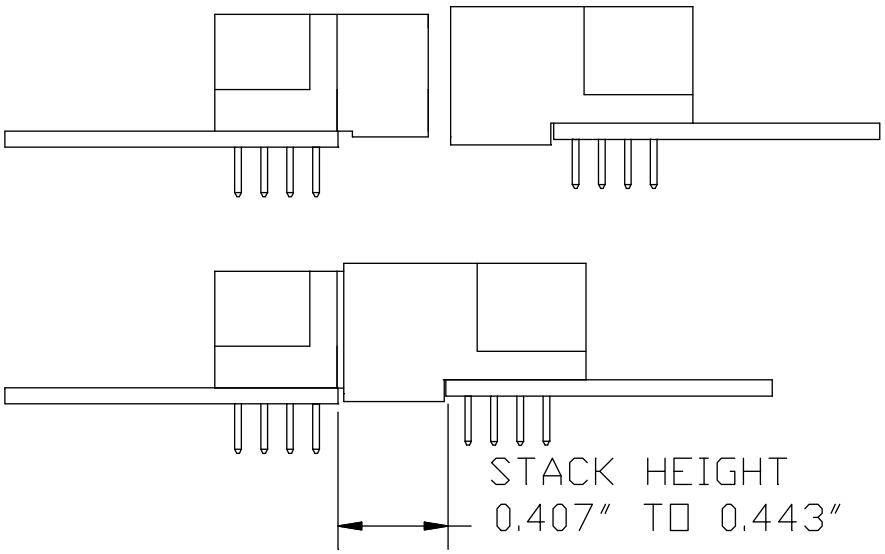

4.5.6.2 Vertical Receptacle to Right Angle Header

Fig. 23

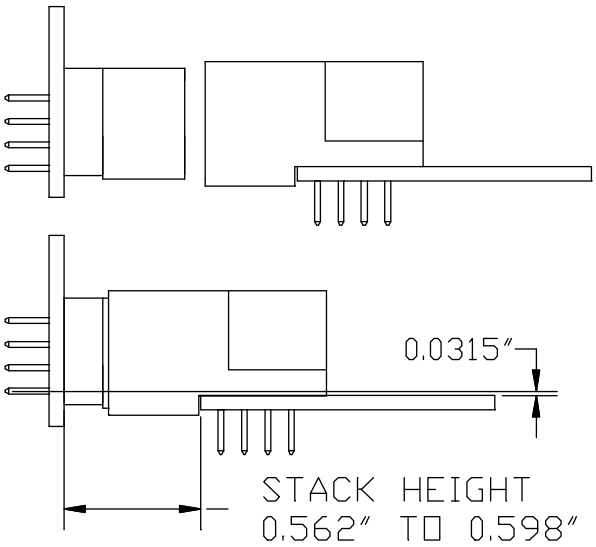

4.5.6.3 Vertical Receptacle to Vertical Header

Fig. 24

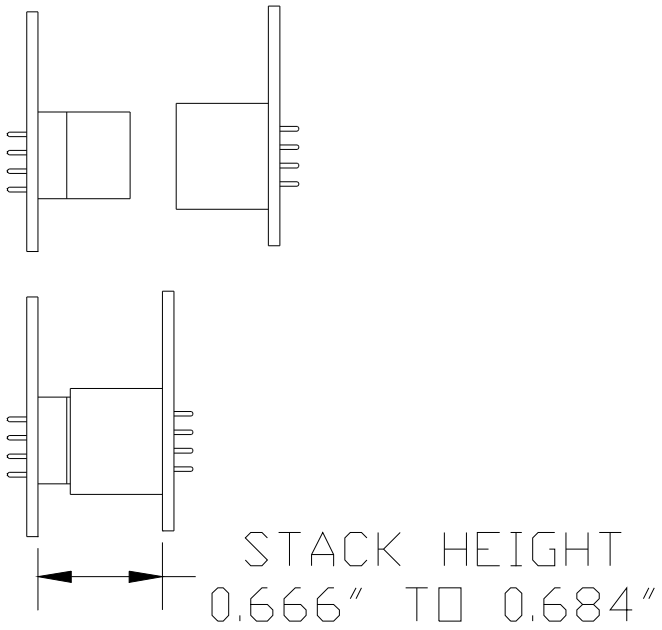

4.5.6.4 Right Angle Receptacle to Vertical Header

Fig. 25

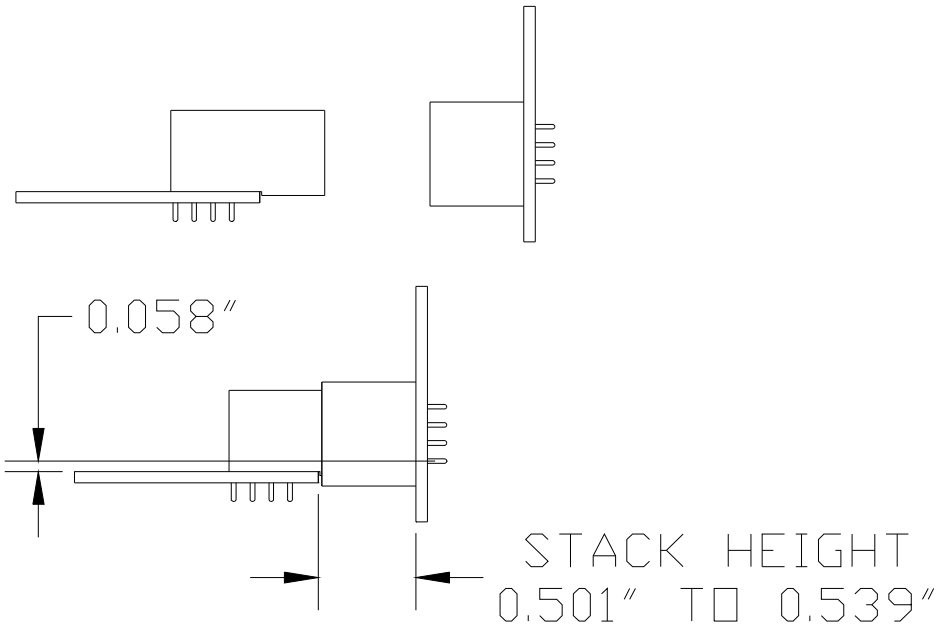

4.5.6.5 Vertical Header to Floating Panel Mount Receptacle

Fig. 26

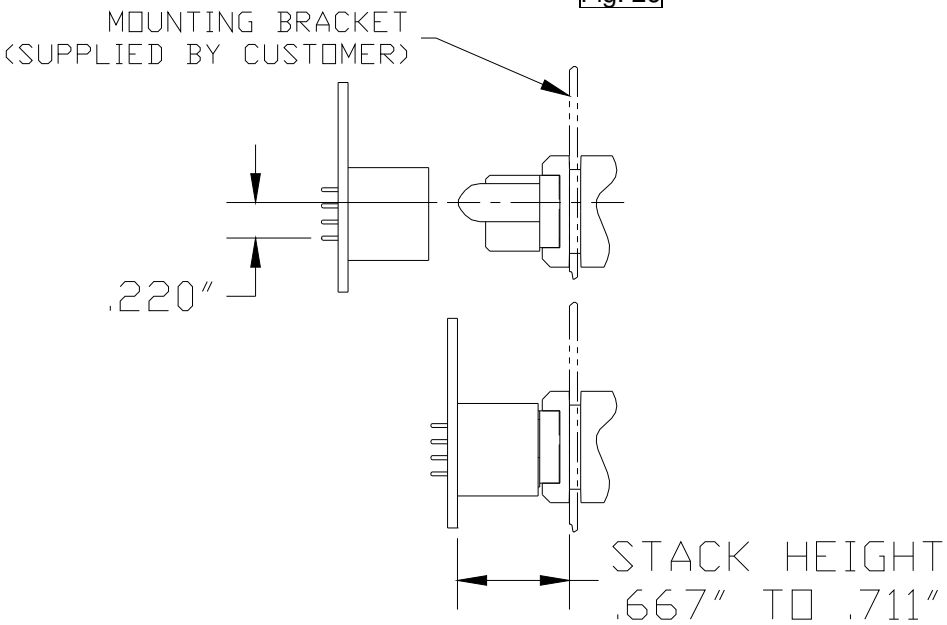

4.5.6.6 Right Angle Header to Floating Panel Mount Receptacle

Fig. 27

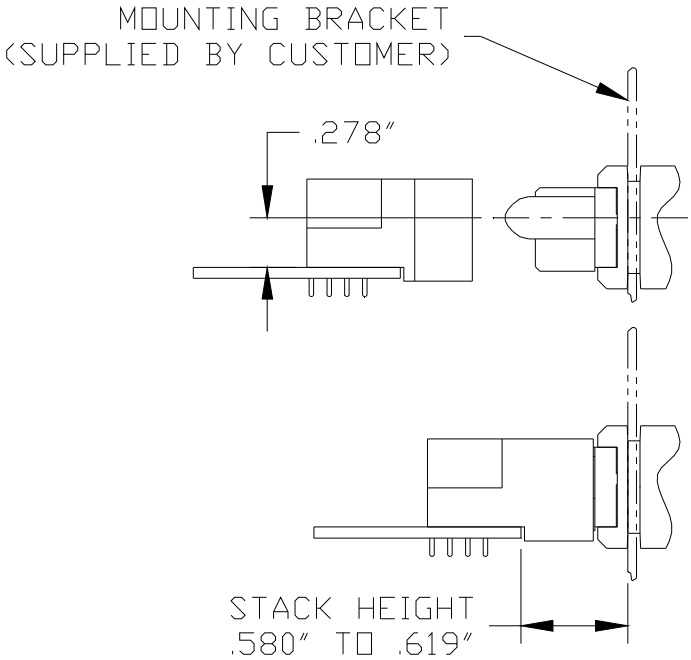

4.5.7 Max Screw Head Size

- A screw head less than .290" or a number 6 screw is needed.

4.5.8 Instruction for Wave Soldering process

- Applies to right angle solder tail headers and receptacles.
- Heat insulation shroud or something like that is recommended to mask the overhanging portion of connector from touching the melted tin-lead or tin solution when PCB placed or inserted with connectors is fed through the wave soldering machine.

Fig. 28

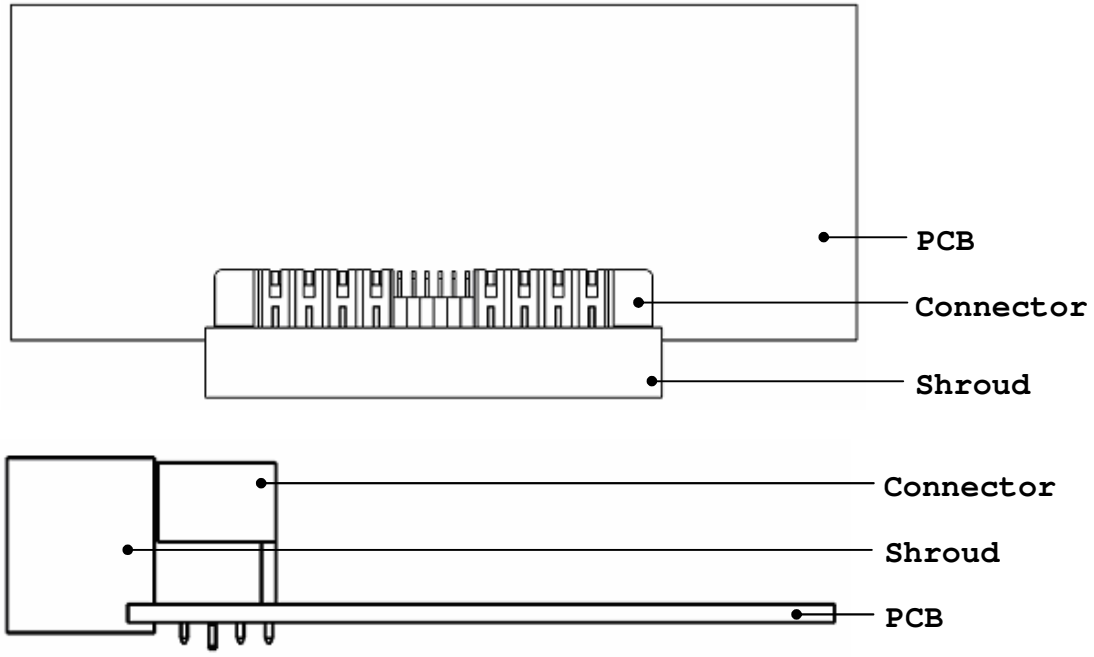

4.6 CAM's

4.6.1 Vertical Header

- Requires custom CAM tooling. Reference FCI customer P/N drawing for tool #.

4.6.2 Vertical Receptacle

- No application specific tooling is needed for press fit vertical receptacles. Flat rock style tooling is suggested.

4.6.3 Right Angle Receptacle

- Requires custom flat rock style CAM tooling. Reference FCI customer P/N drawing for tool #.

NOTE: The following presses or equivalents are recommended:

- MT-301 Handpress P/N 194205-002
- MT-310 Pneumatic Press P/N 194206-001
- Impress 500 M P/N PAY245M with X-Y table
- P/N HM2Y198 without the X-Y table

5.0 REFERENCE DOCUMENTS

51696 Vertical Header Special Worksheet
51697 Right Angle Header Special Worksheet
51698 Vertical Receptacle Special worksheet
51699 Right Angle Receptacle Special Worksheet

517XX

0
POWER/SIGNAL/POWER
WITH GUIDE PINS
1
SIGNAL/POWER
WITH GUIDE PINS
2
POWER/SIGNAL
WITH GUIDE PINS
4
POWER/SIGNAL/POWER
WITHOUT GUIDE PINS
5
SIGNAL/POWER
WITHOUT GUIDE PINS
6
POWER/SIGNAL
WITHOUT GUIDE PINS

0 VERTICAL HEADER
STANDARD PRODUCT
1 VERTICAL HEADER
SPECIAL (SEE WORKSHEETS
FOR ADDITIONAL INFORMATION)
2 RIGHT ANGLE HEADER
STANDARD PRODUCT
3 RIGHT ANGLE HEADER
SPECIAL (SEE WORKSHEETS
FOR ADDITIONAL INFORMATION)
4 VERTICAL RECEPTACLE
STANDARD PRODUCT
5 VERTICAL RECEPTACLE
SPECIAL (SEE WORKSHEETS
FOR ADDITIONAL INFORMATION)
6 RIGHT ANGLE RECEPTACLE
STANDARD PRODUCT
7 RIGHT ANGLE RECEPTACLE
SPECIAL (SEE WORKSHEETS
FOR ADDITIONAL INFORMATION)

REVISION RECORD

REV	PAGE	DESCRIPTION	ECR#	DATE
A	All	New Release	V91601	07/28/99
B	All	Update per mark-up	V91657	08/12/99
C	5,14-17	Add new table for Mass of Housing grams. 4.3 add “with an oxygen index of 49%. Add 12 + .05/ - 0 to Fig. 16. Delete “DIM for Fig.19. Add “Distance between Power Tails per mark-up. Table 5, take out NR and put in 60* for .200”. Add “Contact Pitch” below Fig.21.	V91693	09/14/99
D	7,8,9,10	Change “Standard mate” (Power) to “Pre mate” Change “Post mate” (Power) to Standard mate”	V94343	01/18/00
E	11, 12	Change mating misalignment from .150” to .075”	V00591	02/23/00
F	16	Change line 4 to Table five and line 6 to twenty-one and twenty-two.	V01548	06/30/00
G	All	Revised format to be consistent with GS-01-001, and change BERG, Dupont, etc. references to FCI.	V01922	08/08/00
H	All	Update for vertical header, right angle receptacle press fit and long wipe header	V12261	09/24/01
J	All	Clarify Views for Mating Alignment	V12530	11/14/01
K	All	Add sections 4.5.6.5, 4.5.6.6,	V20465	3/6/02
L	All	Add section 4.5.8	DG06-0390	09/14/06
M	3	Update the description of insertion/retention force in section 4.1.1 to consist with the one defined in PwrBlade product spec. GS-12-149.	DG07-0419	10/23/07
N	6	Correct copper plating thickness from 0.051”+/-1.23 to 0.051”+/-0.025	DG10-0389	11/9/10